WORLDWIDE ELECTRIC MOTOR DATA SHEET

PREMIUM EFFICIENT VERTICAL HOLLOW SHAFT MOTOR

WPEVHS200-18-460-445TP-DB16.5

HORSEPOWER	**200**		
RPM / POLES	**1800 / 4**		
VOLTAGE / PHASE	**460 V / 3**		
FRAME	**445TP**		
ENCLOSURE / DEGREE OF PROTECTION	**WPI / IP23 (With Rodent Screens)**		
FREQUENCY	**60 HZ Suitable For 50 HZ Operation With 1.0 SF**		
FULL LOAD SPEED	**1788 RPM**		
SERVICE FACTOR	**1.15**		
INSULATION CLASS	**F**		
FULL LOAD AMPS	**221 A**		
LOCKED ROTOR AMPS (STARTING)	**1462 A**		
NEMA CODE LETTER	**G**		
EFFICIENCY / POWER FACTOR	LOAD **100%**	EFF. **95.8%**	P.F. **0.88**
DUTY CYCLE	**CONTINUOUS**		
TORQUE	FULL LOAD **584 lb.ft.**	LRT **166%**	BDT **220%**
NEMA DESIGN	**B**		
MAX. AMBIENT TEMPERATURE	**40° C**		
MAX. ELEVATION	**3300 Ft. Above Sea Level**		
TEMPERATURE RISE (At Full Load)	**80° C**		
SOUND PRESSURE LEVEL	**100 dB(A)**		
MAX. DOWN THRUST	**14400 lbs.**		
UPPER THRUST BEARING	**7232B/DT**		
REGREASING INT. (UPPER)	**12 Months**		
GREASE TYPE (UPPER)	**ISO32 Turbine Oil**		
LOWER RADIAL BALL BEARING	**6318**		
REGREASING INT. (LOWER)	**1-3 Months (Please See Maintenance Manual)**		
GREASE TYPE (LOWER)	**Mobil Polyrex EM**		
ROTATION	**Unidirectional (Non-Reverse Ball Type Ratchet Assembly)**		
CONNECTION DIAGRAM	**460 V - 12 Lead Δ**		
LEAD SIZE	**2 AWG**		
LEAD LENGTH	**14 in.**		
APPROXIMATE WEIGHT	**2099 lbs.**		
INVERTER RATING	**10:1 VT PWM Type (1600 V Spike-Resistant Wire)**		

WORLDWIDE ELECTRIC MOTOR DRAWING

WPEVHS-445TP-200HP

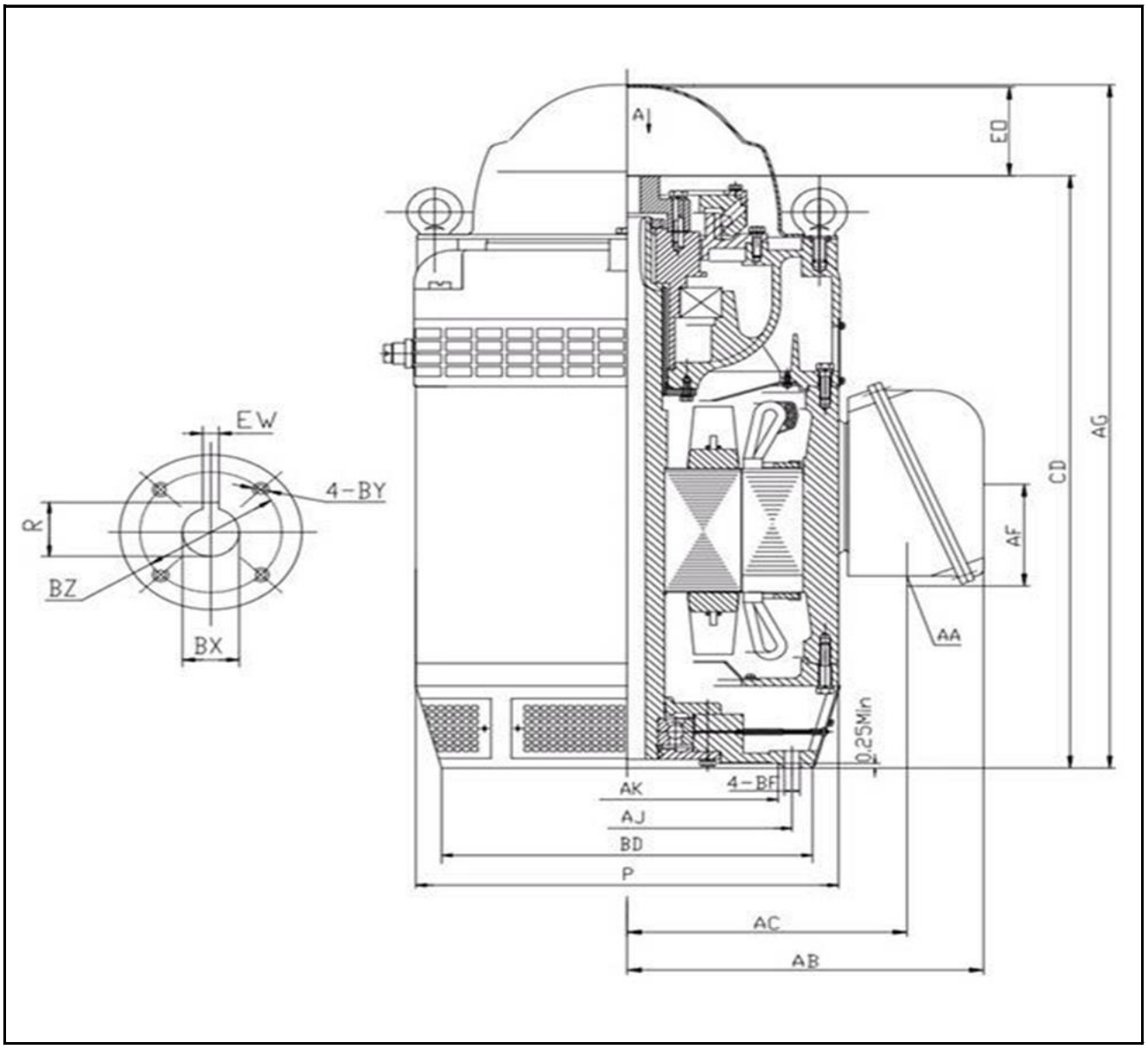

DIMENSIONS - INCHES

BD	AJ	AK	BF	BX	BZ	EW	R	BY
16.5	14.75	13.5	0.69	1.6875	2.5	0.375	1.854	1/4-20

CD	EO>	AC	AA	AF	OVERALL DIMENSIONS		
					P	AB	AG
44.78	5.4	16.18	3" NPT	7.56	23.3	20.7	50.18

REVISED - 09/06/17