WORLDWIDE ELECTRIC MOTOR DATA SHEET

ODP1-18-143T-F2

HORSEPOWER	**1**		
RPM / POLES	**1800 / 4**		
VOLTAGE / PHASE	**208 - 230 / 460 V / 3**		
FRAME	**143T**		
ENCLOSURE / DEGREE OF PROTECTION	**ODP / IP23**		
FREQUENCY	**60 HZ Suitable For 50 HZ Operation With 1.0 SF**		
FULL LOAD SPEED	**1745 RPM**		
SERVICE FACTOR	**1.15 SF 60HZ / 1.0 SF at 50HZ**		
INSULATION CLASS	**F**		
FULL LOAD AMPS; 230 / 460	**2.8 / 1.4 A**		
LOCKED ROTOR AMPS (STARTING); 230 / 460	**21.18 / 10.59 A**		
NO LOAD CURRENT	**1.40 / 0.70 A**		
NEMA CODE LETTER	**K**		
EFFICIENCY / POWER FACTOR	LOAD	EFF.	P.F.
	100%	**85.5%**	**0.80**
	75%	**86.2%**	**0.73**
	50%	**84.8%**	**0.62**
DUTY CYCLE	**S1 / Continuous**		
TORQUE	FULL LOAD	LRT	BDT
	3.03lb.ft.	**314%**	**331%**
SLIP	**3.202%**		
NEMA DESIGN	**B**		
NUMBER OF STARTS (Hot / Cold)	**2 Hot / 3 Cold**		
MAX. AMBIENT TEMPERATURE	**40° C**		
MAX. ELEVATION	**3300 Ft. Above Sea Level**		
TEMPERATURE RISE (At Full Load)	**80° C**		
DE BEARING	**6205ZZ**		
ODE BEARING	**6204ZZ**		
GREASE TYPE	**NS7 ENS**		
MOUNTING	**F2**		
ROTATION	**Bi-Directional**		
APPROXIMATE WEIGHT	**33.1 lbs.**		
AREA CLASSIFICATION	**Non-Hazardous**		
INVERTER RATING	**10:1 CT / 20:1 VT PWM Type**		
SPECIFICATION - In Accordance With	**NEMA, UR**		

C US EEV 215302 **CC067A**

AUGUST 18, 2020

WORLDWIDE ELECTRIC MOTOR DRAWING

ODP-143T-F2

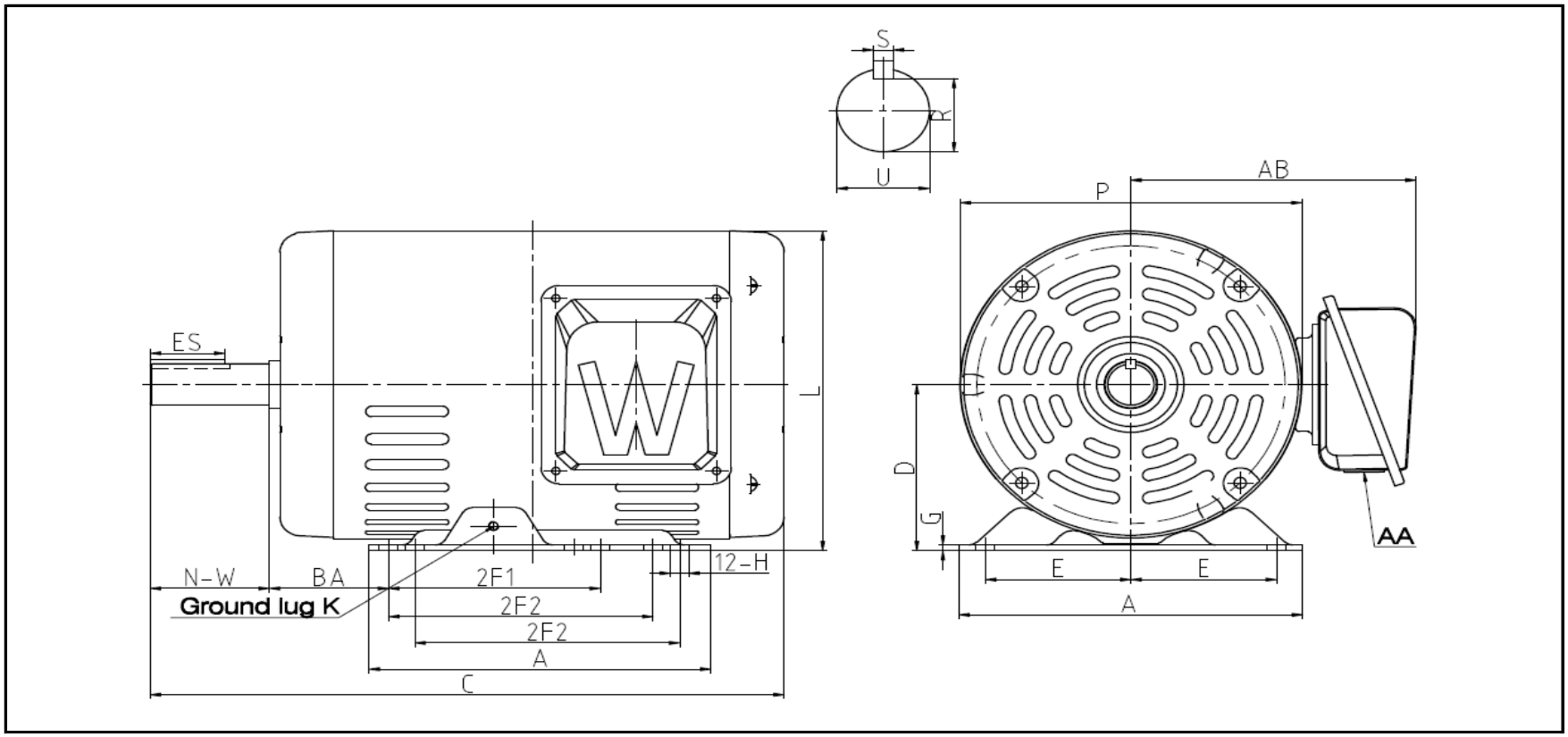

DIMENSIONS - INCHES

MOUNTING										
E	**2F1**	**2F2**	**H**	**BA**	**A**	**B**	**C**	**D**	**G**	**K**
2.75	4	5	0.34	2.25	6.5	6.5	11.974	3.5	0.118	M5

KEYSET	KEY							
R	**ES**	**S**	**U**	**N-W**	**P**	**AB**	**AA**	**L**
0.771	1.41	0.188	0.875	2.25	6.4	5.384	1.09	6.4

REVISED - 11/14/18