DATA SHEET

Premium Efficiency Motor: **LAM30-12-326TC** **60 Hz**

WorldWide Electric Corporation
1 (800) 808-2131
Worldwideelectric.net

Document Generated: 18-Jul-2023
Document ID:

Customer:

MOTOR INFORMATION

HP	30
RPM	1200
Phase	3
Frequency	60Hz
Voltage	230/460
Frame Size	324/6TC
Enclosure	TEFC
Degree of Protection	IP55
Service Factor	1.25
Poles	6
Full Load Speed	1185
Insulation Class	F
Temp Rise	80°C
NEMA Code Letter	G
Duty Cycle	S1 / Continuous
Slip	1.25%
NEMA Design	B
Moment of Inertia	10.748 lb.ft.^2
Locked Rotor Time (Hot)	12 seconds
Sound Pressure Level	83 dB(A)
Number of Starts	2 Cold/1 Hot
Max Ambient Temperature	40°C
Max Elevation	1000 m.a.s.l (3300 f.a.s.l)
Mounting	F1
Rotation	Bi-Directional
Area of Classification	Class 1 Division 2 Groups A,B,C,D T3B
Inverter Rating	10:1 CT / 20:1 VT
Standard	NEMA MG-1
Approvals	UL, CE, IEEE45, ABS

ADDITIONAL DATA

F2 Suitable	Yes
Shaft Material	AISI 1045
Connection Diagram	12 Lead Delta
Approximate Weight	692.2 lbs.

EFFICIENCY/POWER FACTOR

LOAD	EFF	P. F.
100%	93.0 %	0.79
75%	93.2 %	0.83
50%	93.1 %	0.75

TORQUE

FULL LOAD	LRT	BDT
131.7 lb.ft.	243 %	288 %

AMPERAGE INFORMATION

	230V	460V
Full Load Amps	74.8A	37.4
Locked Rotor Amps	466.6A	233.3A
No Load Current	23.4A	11.7A
Usable at 208V	76.5 A	

BEARING INFORMATION

DE Bearing	6314 C3
ODE Bearing	6212 C3
Grease Type	Mobil Polyrex EM
DE Regreasing Interval	2400 Hours
ODE Regreasing Interval	3600 Hours
Grease Quantity	26g/12g

This document is the property of WorldWide Electric Corporation and may not be reproduced without express authorization

MOTOR DRAWING

Premium Efficiency Motor: **LAM30-12-326TC**

WorldWide Electric Corporation
1 (800) 808-2131
Worldwideelectric.net

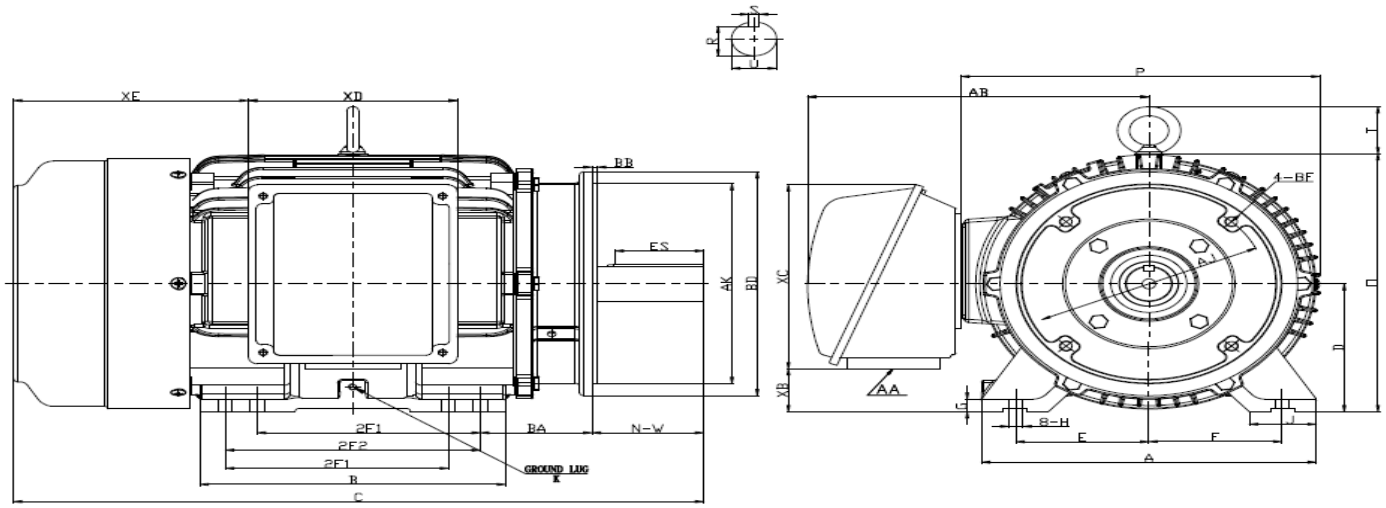

DIMENSION - INCHES

MOUNTING													
E	2F1	2F2	H	BA	A	B	C	D	G	P	O	T	AB
6.25	10.5	12	0.66	5.25	15.75	14.37	32.67	8	0.984	16.9	16.19	2.42	2.7

SHAFT & KEY				
S	ES	R	N-W	U
0.5	3.91	1.845	5.25	2.125

TERMINAL BOX				
AA	XB	XC	XD	XE
2 NPT	2.7	11.27	9.17	11.1

GROUND LUG
M8

FLANGE				
AK	BD	AJ	BF	BB
12.5	14	11	4*5/8-11	0.25

This document is the property of WorldWide Electric Corporation and may not be reproduced without express authorization

PERFORMANCE CURVES

Premium Efficiency Motor: **LAM30-12-326TC**

WorldWide Electric Corporation
1 (800) 808-2131
Worldwideelectric.net

Document Generated:	18-Jul-2023
Document ID:	

Customer:

Motor Type	LAM					
Output Rating (HP)	30		FL Speed	1185		
Full Load Torque	131.7	lb.ft	LRT (%FLT)	243	460 volt FLA	37.4
Rotor Wk^2	10.748	lb-ft^2	BDT (%FLT)	288	230 volt FLA	74.8A

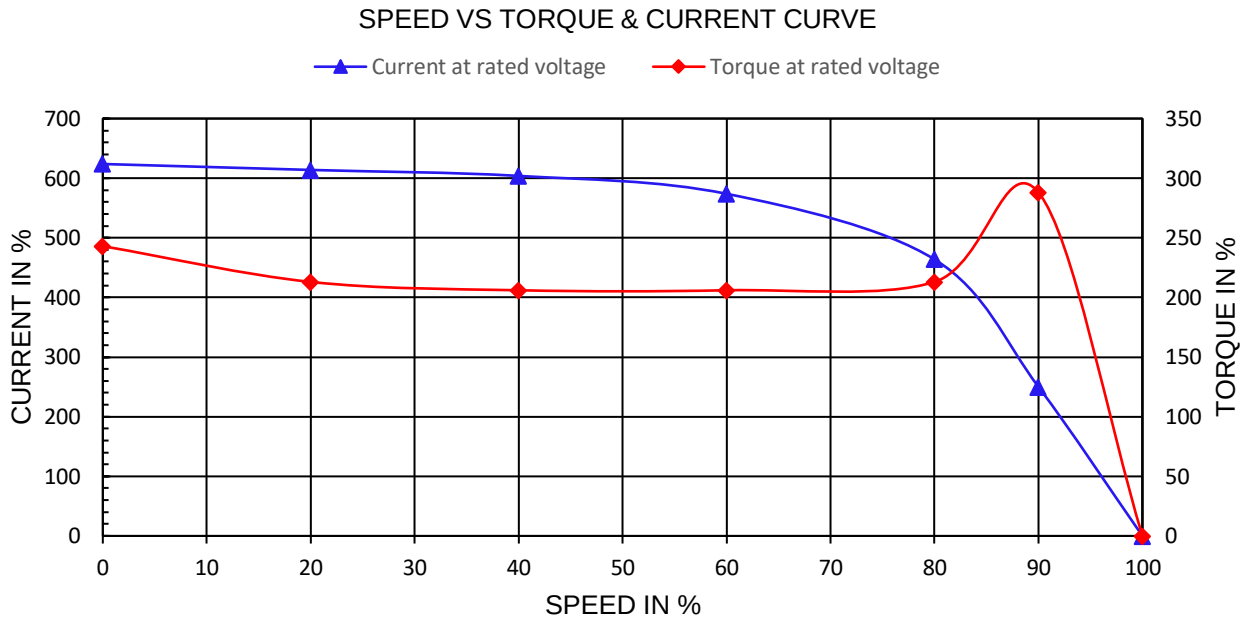

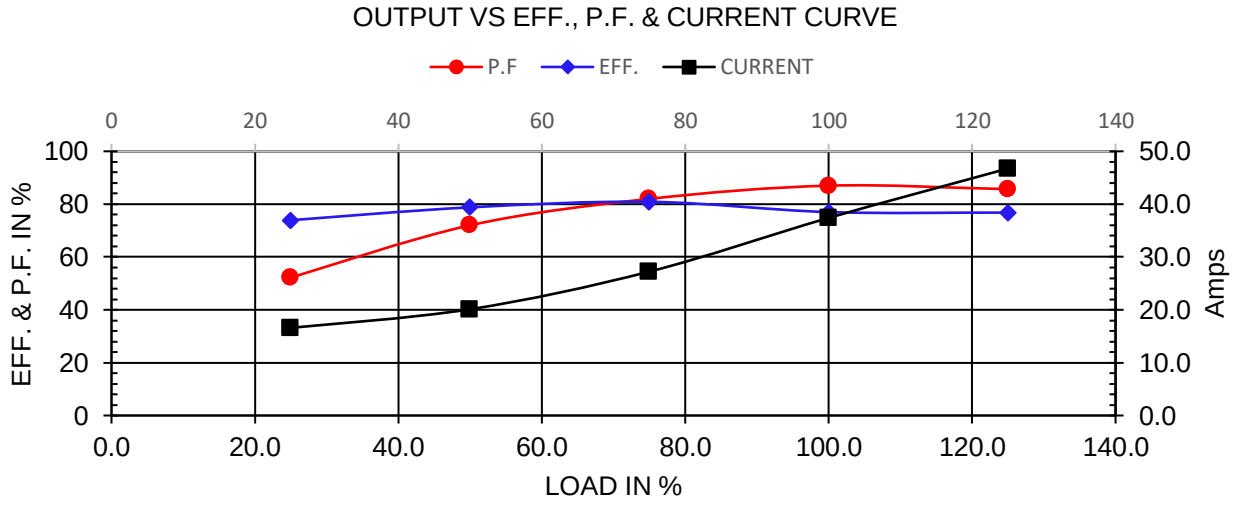

This document is the property of WorldWide Electric Corporation and may not be reproduced without express authorization.

NAMEPLATE / WIRING

Premium Efficiency Motor: **LAM30-12-326TC**

WorldWide Electric Corporation
1 (800) 808-2131
Worldwideelectric.net

Document Generated: 18-Jul-2023 Document ID:	Customer:

SAMPLE NAMEPLATE DATA

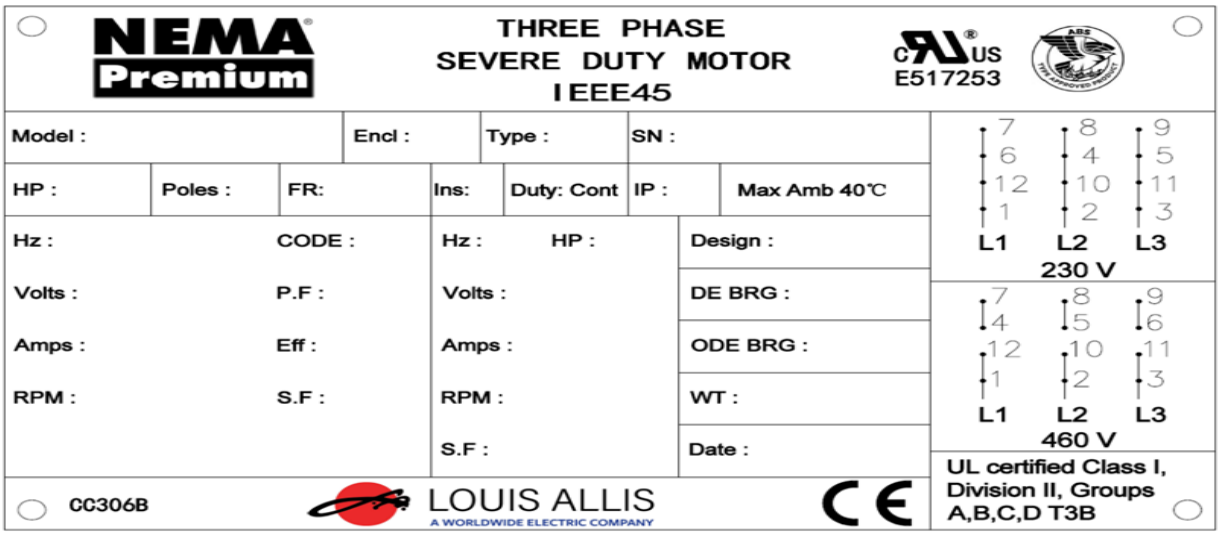

Model:	LAM30-12-326TC	**Encl:**	TEFC	**Type:**	AEH3				
HP:	30	**Poles**	6	**FR:**	324/6TC	**Ins:**	F	**IP:**	55
Hz:	60	**CODE:**	G	**Hz**	50	**HP:**	30	**Design:**	B
Volts:	230/460	**P.F:**	0.79	**Volts:**	190/380			**DE BRG:**	6314 C3
Amps:	74.8/37.4	**Eff:**	0.93	**Amps**	88.8/44.4			**ODE BRG:**	6212 C3
RPM:	1185	**S.F:**	1.25	**RPM**	980			**WT:**	692.2 lbs.
				S.F:	1.00				

This document is the property of WorldWide Electric Corporation and may not be reproduced without express authorization