DATA SHEET

Premium Efficiency Motor: **LAM1.5-36-143T** **60 Hz**

WorldWide Electric Corporation
1 (800) 808-2131
Worldwideelectric.net

Document Generated: 17-Jul-2023
Document ID:

Customer:

MOTOR INFORMATION

HP	1.5
RPM	3600
Phase	3
Frequency	60 Hz
Voltage	230/460
Frame Size	143/5T
Enclosure	TEFC
Degree of Protection	IP55
Service Factor	1.25
Poles	2
Full Load Speed	3450
Insulation Class	F
Temp Rise	80°C
NEMA Code Letter	M
Duty Cycle	S1 / Continuous
Slip	4.17%
NEMA Design	B
Moment of Inertia	0.05 lb.ft.^2
Locked Rotor Time (Hot)	12 seconds
Sound Pressure Level	85 dB(A)
Number of Starts	2 Cold/1 Hot
Max Ambient Temperature	40°C
Max Elevation	1000 m.a.s.l (3300 f.a.s.l)
Mounting	Rigid
Rotation	Bi-Directional
Area of Classification	Class 1 Division 2 Groups A,B,C,D T3B
Inverter Rating	10:1 CT / 20:1 VT
Standard	NEMA MG-1
Approvals	UL, CE, IEEE45, ABS

ADDITIONAL DATA

F2 Suitable	Yes
Shaft Material	AISI 1045
Connection Diagram	9 Lead Wye
Approximate Weight	50.7 lbs.

EFFICIENCY/POWER FACTOR

LOAD	EFF	P. F.
100%	84.0 %	0.86
75%	84.0 %	0.80
50%	81.6 %	0.7

TORQUE

FULL LOAD	LRT	BDT
2.2 lb.ft.	396 %	505 %

AMPERAGE INFORMATION

	230V	460V
Full Load Amps	3.8A	1.9A
Locked Rotor Amps	40A	20A
No Load Current	1.66A	0.83A
Usable at 208V	4.2 A	

BEARING INFORMATION

DE Bearing	6205 ZZ
ODE Bearing	6204 ZZ
Grease Type	NSK SN7
DE Regreasing Interval	-- Hours
ODE Regreasing Interval	-- Hours
Grease Quantity	--

This document is the property of WorldWide Electric Corporation and may not be reproduced without express authorization

MOTOR DRAWING

Premium Efficiency Motor: **LAM1.5-36-143T**

WorldWide Electric Corporation
1 (800) 808-2131
Worldwideelectric.net

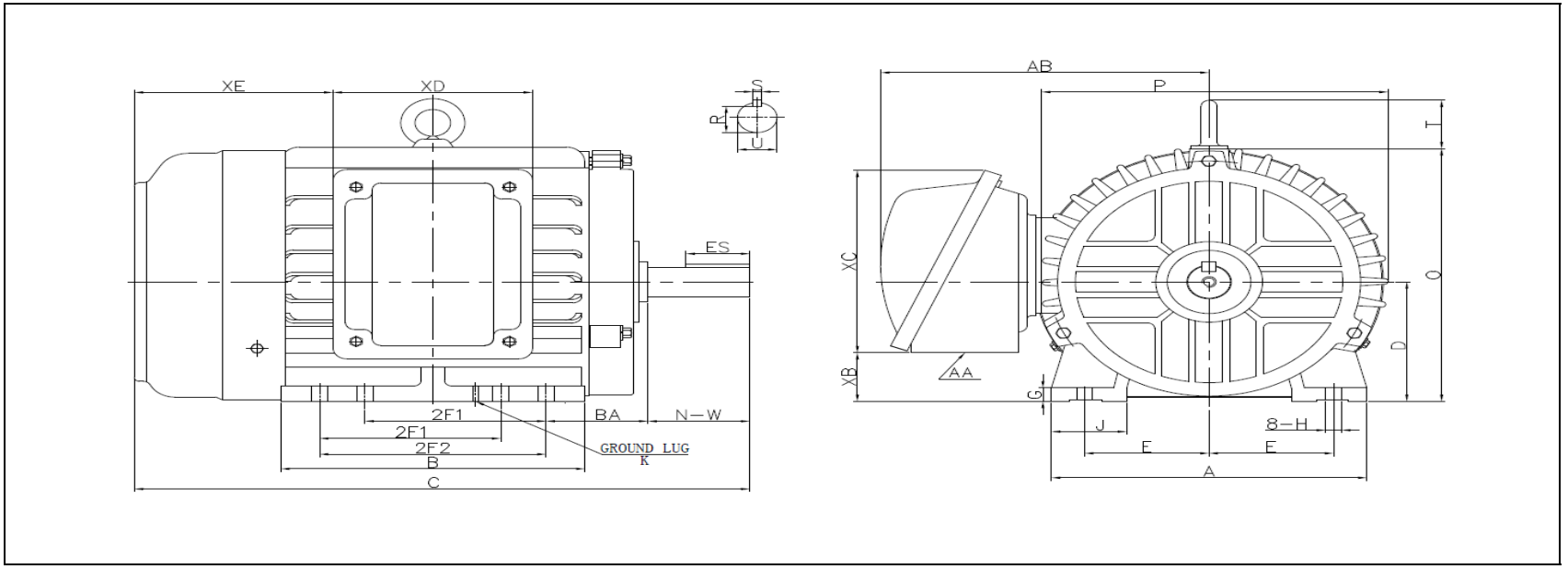

DIMENSION - INCHES

MOUNTING														
E	**2F1**	**2F2**	**H**	**BA**	**A**	**B**	**C**	**D**	**G**	**J**	**P**	**O**	**T**	**AB**
2.75	4	5	0.34	2.25	7	6.77	13.59	3.5	0.39	1.66	7.66	7.41	1.4	1.42

SHAFT & KEY				
S	**ES**	**R**	**N-W**	**U**
0.188	1.41	0.771	2.25	0.875

TERMINAL BOX				
AA	**XB**	**XC**	**XD**	**XE**
3/4 NPT	1.42	5.4	4.4	4.4

GROUND LUG
M5

This document is the property of WorldWide Electric Corporation and may not be reproduced without express authorization

PERFORMANCE CURVES

Premium Efficiency Motor: **LAM1.5-36-143T**

WorldWide Electric Corporation
1 (800) 808-2131
Worldwideelectric.net

Document Generated:	17-Jul-2023
Document ID:	

Customer:

Motor Type	AEH3						
Output Rating (HP)	1.5		FL Speed	3450			
Full Load Torque	2.2	lb.ft	LRT (%FLT)	396	460 volt FLA	1.9	
Rotor Wk^2	0.05	lb-ft^2	BDT (%FLT)	505	230 volt FLA	3.8	

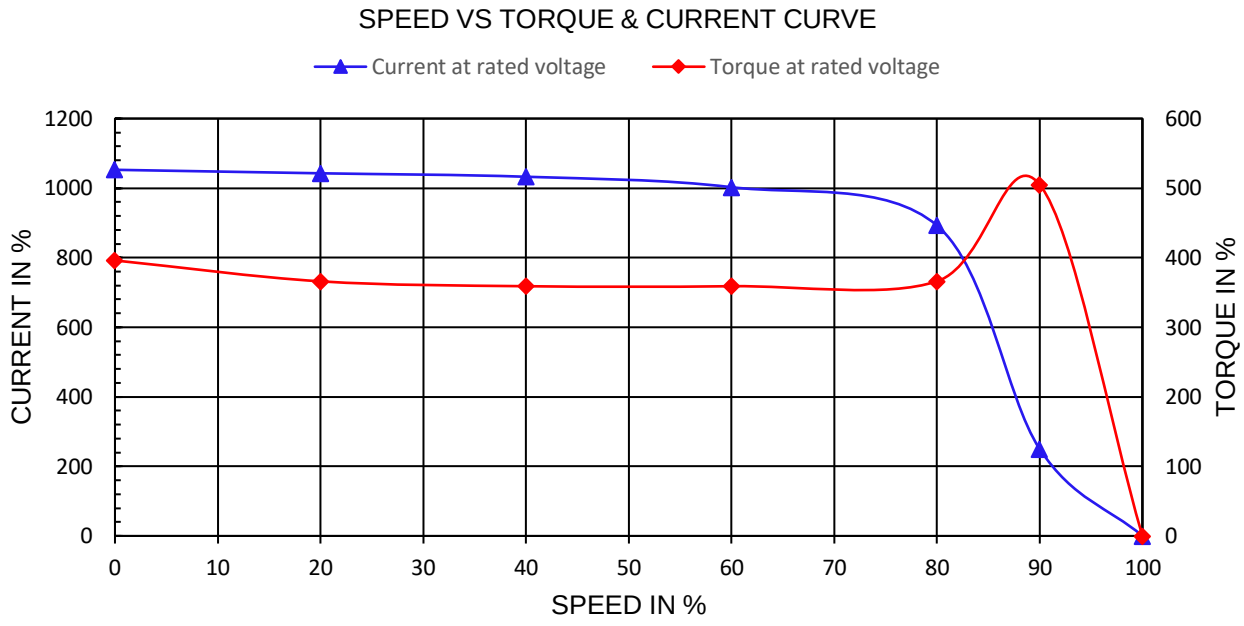

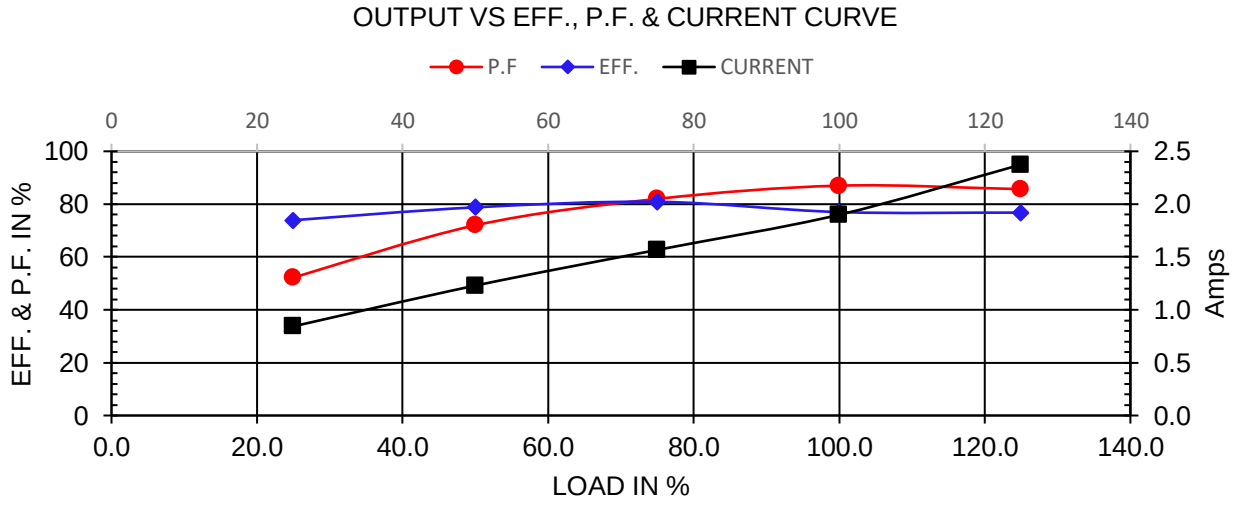

This document is the property of WorldWide Electric Corporation and may not be reproduced without express authorization.

NAMEPLATE / WIRING

Premium Efficiency Motor: **LAM1.5-36-143T**

WorldWide Electric Corporation
1 (800) 808-2131
Worldwideelectric.net

Document Generated:	17-Jul-2023
Document ID:	

Customer:

SAMPLE NAMEPLATE DATA

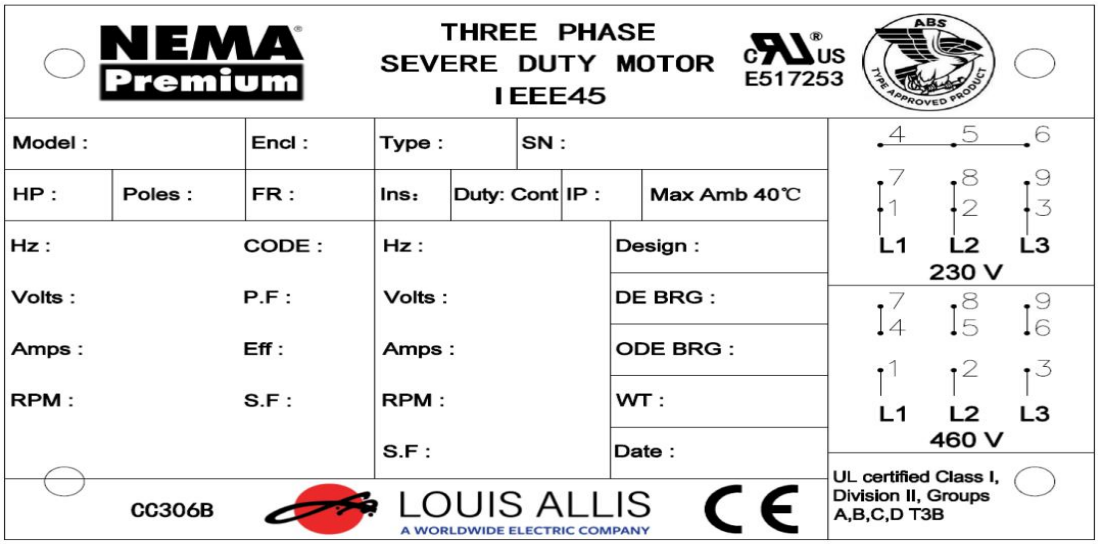

Model:	LAM1.5-36-143T			**Encl:**	TEFC	**Type:**	AEH3		
HP:	1.5	**Poles**	2	**FR:**	143/5T	**Ins:**	F	**IP:**	55
Hz:	60	**CODE:**	M	**Hz**	50	**HP:**	1.5	**Design:**	B
Volts:	230/460	**P.F:**	0.86	**Volts:**	190/380			**DE BRG:**	6205 ZZ
Amps:	3.8/1.9	**Eff:**	0.84	**Amps**	4.6/2.3			**ODE BRG:**	6204 ZZ
RPM:	3450	**S.F:**	1.25	**RPM**	2840			**WT:**	50.7 lbs.
				S.F:	1.00				

This document is the property of WorldWide Electric Corporation and may not be reproduced without express authorization