AC INDUCTION MOTOR DATA SHEET
UL EXPLOSION PROOF MOTORS

MODEL NUMBER	**IXHHI7.5-18-213T**		
HORSEPOWER	**7.5**		
RPM / POLES	**1800 / 4**		
VOLTAGE / PHASE	**230 / 460 V / 3**		
FRAME	**213T**		
ENCLOSURE / DEGREE OF PROTECTION	**TEFC / IP54**		
FREQUENCY	**60 HZ**		
FULL LOAD SPEED	**1760 RPM**		
SERVICE FACTOR	**1.15**		
INSULATION CLASS	**F Class N Varnish**		
FULL LOAD AMPS; 230 / 460	**19.1 / 9.5 A Usable On 208 V At 21.1 A**		
LOCKED ROTOR CURRENT (% Full Load)	**770 / 770 %**		
NEMA CODE LETTER	**J**		
EFFICIENCY / POWER FACTOR	LOAD	EFF.	P.F.
	100 %	**91.7 %**	**79.0 %**
	75 %	**91.7 %**	**74.0 %**
	50 %	**89.5 %**	**63.0 %**
DUTY CYCLE	**S1 / Continuous**		
TORQUE	FULL LOAD	LRT	BDT
	22.0 lb.ft.	**190 %**	**250 %**
NEMA DESIGN	**B**		
MOMENT OF INERTIA	LOAD (Max.)		MOTOR
	130.518 lb.ft.^{2}		**0.570 lb.ft.^{2}**
SOUND PRESSURE LEVEL (No Load 1 M From Motor)	**69 dB(A)**		
MAX. SHAFT VIBRATION	**0.08 In/Sec – Peak Velocity**		
NUMBER OF STARTS (Hot / Cold)	**2 Hot / 3 Cold**		
MAX. ELEVATION	**3300 Ft. Above Sea Level**		
TEMPERATURE RISE (At Full Load)	**80° C**		
DRIVE-END BEARING	**6307ZZC3**		
OPPOSITE DRIVE-END BEARING	**6307ZZC3**		
GREASE TYPE	**Mobil Polyrex EM**		
MOUNTING	**F1, W6, W8, B3, V5, V6**		
ROTATION	**Bi-Directional**		
APPROXIMATE WEIGHT	**160 lbs.**		
AREA CLASSIFICATION	**Class I, Division 1, Groups C and D**		
TEMPERATURE CODE WITH THERMOSTAT USE	**T4**		
TEMPERATURE CODE AT 40°C AMBIENT	**T2C**		
TEMPERATURE CODE AT 55°C AMBIENT	**T2B**		
THERMOSTAT TYPE	**Normally Closed**		
INVERTER RATING	**6:1 CT (Constant) / 10:1 CT (Intermittent-1 Hour) / 10:1 VT**		
INSULATION TYPE	**Hyundai Inverter Shield, Meets NEMA MG1 Part 31**		
UL CERTIFICATION NUMBER	**E216236**		

EEV 109973

CC 038A

REVISED 04/01/14

HYUNDAI HEAVY INDUSTRIES CO., LTD.	TEFC THREE PHASE INDUCTION MOTOR	TYPE	XKP,XIP CAST IRON FRAME

FRAME SIZE	OUTPUT(HP)	POLES	Hz	TIME RATING

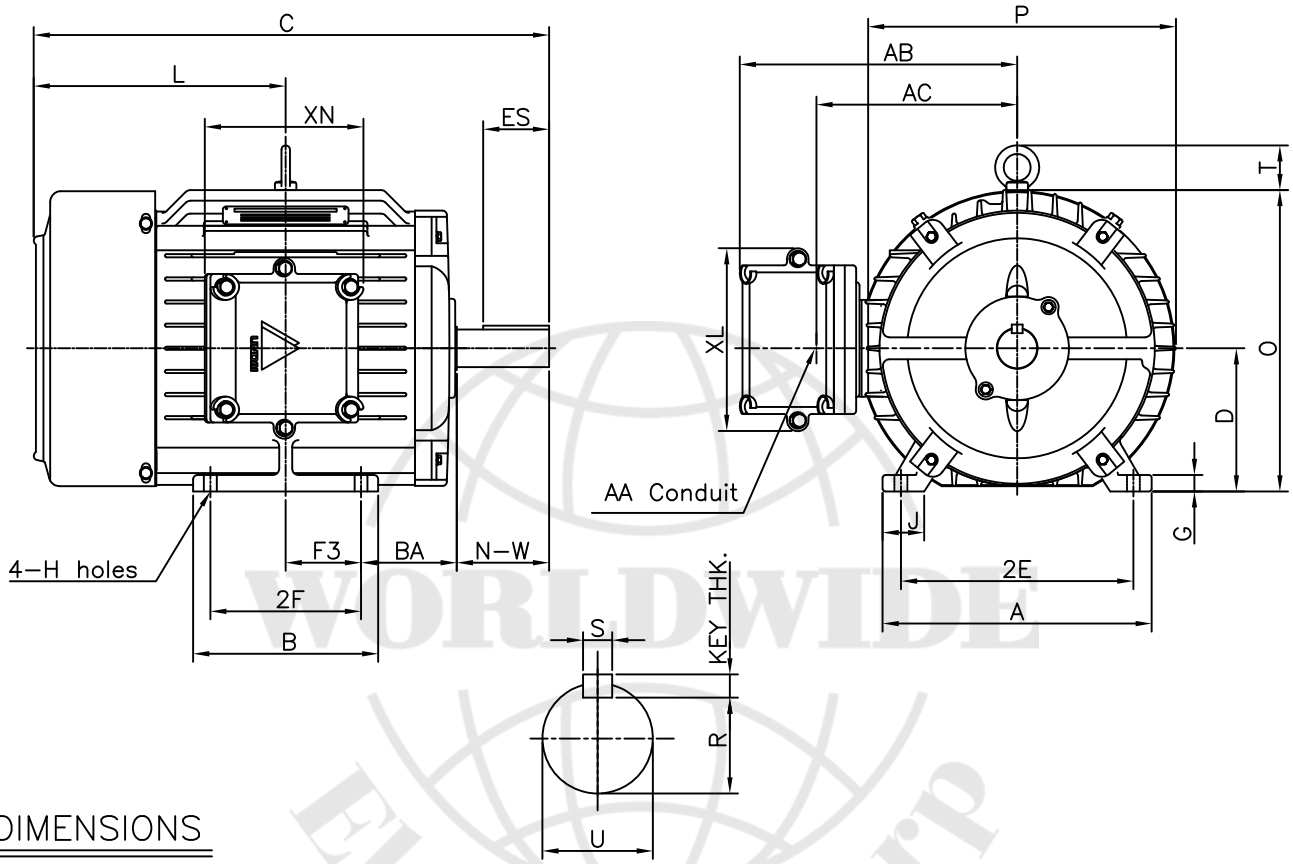

DIMENSIONS

MOUNTING									CONDUIT BOX						APPROX. WGT.(lb)
A	B	2E	2F	–	F3	G	J	H	AA	AB	AC	XB	XL	XN	
9.85	6.77	8.50	5.50	–	2.75	0.60	1.52	0.41	1.00	10.15	7.35	–	6.69	5.98	160

OVERALL							SHAFT					KEY THK.	BEARING	
BA	C	D	L	O	P	T	U	N-W	KEYWAY				DRIVE END	OPP. DRIVE END
									R	ES	S			
3.50	18.86	5.25	9.22	11.02	11.26	1.63	1.375	3.38	1.201	2.41	0.312	0.312	6307ZZC3	6307ZZC3

NOTE

1. Dimension "D" tolerance : +0.00inch – 0.03inch
2. Dimension "U" tolerance : +0.000inch – 0.0005inch
3. Dimension "R" tolerance : +0.000inch – 0.015inch

APPD BY	J.H.KIM	UNIT	INCH	SUBJECT	NEMA 213T	CAD PROJ \ FILE LM-U1213B3TL001
CHKD BY	N.D.LEE	SCALE	1/8	TITLE	OUTLINE	
CHKD BY	K.S.LEE	PROJEC'N	3rd Angle			
DSND BY	S.W.SEO	DATE	2012.02.11			

HYUNDAI HEAVY INDUSTRIES CO., LTD. Electro-Electric System Division	REF. NO	LM-U1213B3TL001	Sheet No. of
	DWG NO	LM-U1213B3TL001	Revision No. 0

WORLDWIDE Electric Corp