AC INDUCTION MOTOR DATA SHEET
CROWN TRITON™ MOTORS

MODEL NUMBER	**HHI25-18-284TCRD**
HORSEPOWER	**25**
RPM / POLES	**1800 / 4**
VOLTAGE / PHASE	**230 / 460 V / 3**
FRAME	**284TC – Round Body**
ENCLOSURE / DEGREE OF PROTECTION	**TEFC / IP55**
FREQUENCY	**60 HZ**
FULL LOAD SPEED	**1775 RPM**
SERVICE FACTOR	**1.15 SF at 40° C / 1.0 SF at 65° C**
INSULATION CLASS	**F Class N Varnish**
FULL LOAD AMPS; 230 / 460	**60.6 / 30.3 A Usable On 208 V At 67.0 A**
LOCKED ROTOR CURRENT (% Full Load)	**680 / 680 %**
NEMA CODE LETTER	**H**
EFFICIENCY / POWER FACTOR	LOAD / EFF. / P.F. **100 % / 93.6 % / 82.0 %** **75 % / 93.8 % / 79.5 %** **50 % / 92.9 % / 73.0 %**
DUTY CYCLE	**S1 / Continuous**
TORQUE	FULL LOAD / LRT / BDT **73.4 lb.ft. / 170 % / 220 %**
NEMA DESIGN	**B**
MOMENT OF INERTIA	LOAD (Max.) / MOTOR **327.481 lb.ft.^{2} / 3.940 lb.ft.^{2}**
SOUND PRESSURE LEVEL (No Load 1 M From Motor)	**75 dB(A)**
NUMBER OF STARTS (Hot / Cold)	**2 Hot / 3 Cold**
MAX. AMBIENT TEMPERATURE	**40° C at 1.15 SF / 65° C at 1.0 SF**
MAX. ELEVATION	**3300 Ft. Above Sea Level**
TEMPERATURE RISE (At Full Load)	**80° C**
DRIVE-END BEARING	**6310ZC3**
OPPOSITE DRIVE-END BEARING	**6310ZC3**
GREASE TYPE	**Mobil Polyrex EM**
MOUNTING	**F1 (F2 Suitable), W6, W8, B3, V5, V6**
ROTATION	**Bi-Directional**
APPROXIMATE WEIGHT	**380 lbs.**
AREA CLASSIFICATION	**Class I, Division 2, Groups A, B, C, D**
INVERTER RATING	**10:1 CT / 20:1 VT - Meets NEMA MG1 Part 31**
SPECIFICATION - In Accordance With	**NEMA, CSA**

C US EEV 109973 CC 038A

REVISED 03/15/17

HYUNDAI HEAVY INDUSTRIES CO., LTD.

TEFC

THREE PHASE INDUCTION MOTOR

TYPE	LP, JP
	CAST IRON FRAME

FRAME SIZE	OUTPUT(HP)	POLES	Hz	TIME RATING

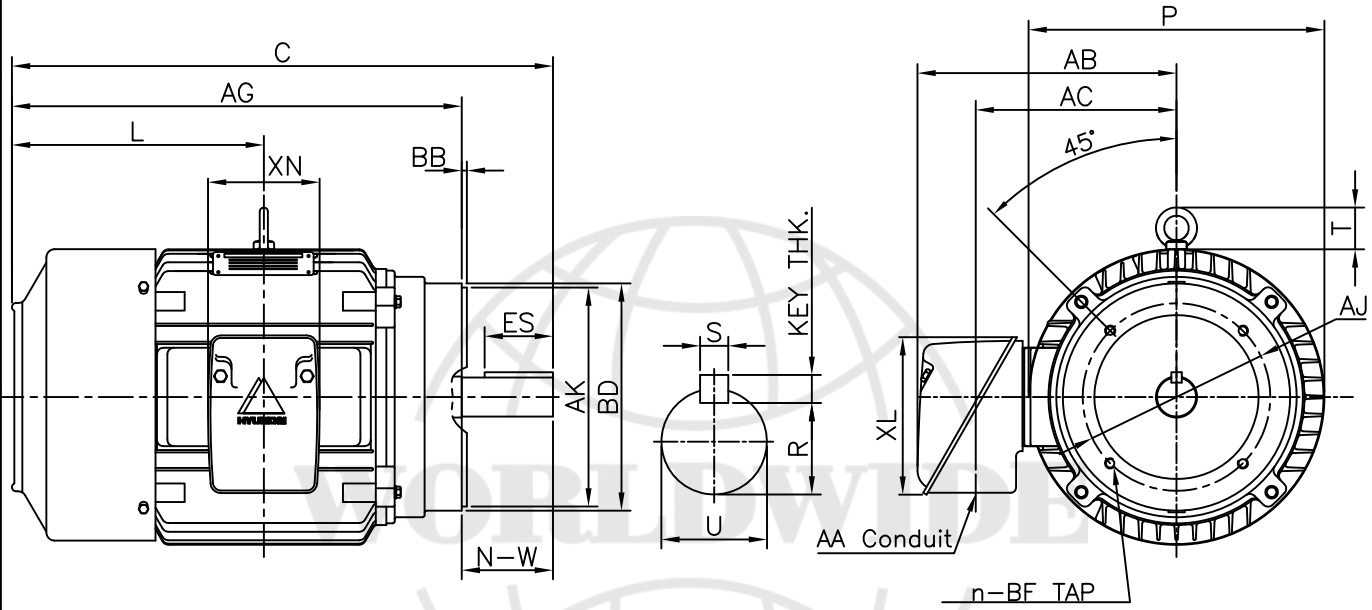

DIMENSIONS

FLANGE						CONDUIT BOX					APPROX. WGT.(LB)
AJ	AK	BD	BB	BF	n	AA	AB	AC	XL	XN	
9.00	10.50	10.90	0.25	1/2–13	4	1.50	12.43	9.64	7.56	6.61	380

OVERALL					SHAFT					KEY THK.	BEARING	
AG	C	L	P	T	U	N–W	KEYWAY				DRIVE END	OPP. DRIVE END
							R	ES	S			
21.59	26.21	12.09	14.19	2.01	1.875	4.62	1.591	3.28	0.500	0.500	6310ZC3	6310ZC3

NOTE

1. Dimension "U" tolerance : +0.000inch – 0.001inch
2. Dimension "R" tolerance : +0.000inch – 0.015inch
3. Dimension "AK" tolerance : +0.000inch – 0.003inch

APPD BY	Y. S. KIM	UNIT	mm	SUBJECT	NEMA 284TC	CAD PROJ \ FILE XSDNKS\A1509AA
CHKD BY	S. H. KO	SCALE	1/8.5	TITLE	OUTLINE	
CHKD BY		PROJEC'N	3rd Angle			
DSND BY	LEE KWANG SOO	DATE	2004.04.13			

HYUNDAI HEAVY INDUSTRIES CO., LTD.
Electro–Electric System Division

REF. NO	A1509AA	Sheet No. of
DWG NO	350A1509AA	Revision No. 0