DATA SHEET

Premium Efficiency Motor: **FD2-18-145T,** **60 Hz**

WorldWide Electric Corporation
1 (800) 808-2131
Worldwideelectric.net

Document Generated:	21-Feb-2023
Document ID:	

Customer:

MOTOR INFORMATION

HP	2
RPM	1800
Phase	1
Frequency	60 Hz
Voltage	230
Frame Size	145T
Enclosure	TEFC
Degree of Protection	IP55
Service Factor	1.15
Poles	4
Full Load Speed	1758
Insulation Class	F
Temp Rise	80°C
NEMA Code Letter	F
Duty Cycle	S1 / Continuous
Slip	2.36%
Max Ambient Temperature	40°C
Max Elevation	1000 m.a.s.l (3300 f.a.s.l)
Mounting	F1
Rotation	Bi-Directional
Mounting Type	Rigid Base
Standard	NEMA MG-1
Approvals	UL, CE

ADDITIONAL DATA

F2 Suitable	No
Shaft Material	1045 Carbon Steel
Connection Diagram	230V - 4 Lead
Approximate Weight	48.5 lbs.

EFFICIENCY/POWER FACTOR

LOAD	EFF	P. F.
100%	85.6 %	97.5
75%	83.0 %	97.90
50%	68.2 %	97.1

TORQUE

FULL LOAD	LRT	BDT
6.01 lb.ft.	299 %	241 %

AMPERAGE INFORMATION

	230V
Full Load Amps	7.82A
Locked Rotor Amps	48.69A
No Load Current	1.43A
Usable at 208V	8.65A

BEARING INFORMATION

DE Bearing	6205ZZ C3
ODE Bearing	6203ZZ C3
Grease Type	NSK SN7

CAPACITOR INFORMATION

Start Capacitor	(1)200uF/300V
Run Capacitor	(1)30uF/450V

This document is the property of WorldWide Electric Corporation and may not be reproduced without express authorization

MOTOR DRAWING

Premium Efficiency Motor: **FD2-18-145T**

WorldWide Electric Corporation
1 (800) 808-2131
Worldwideelectric.net

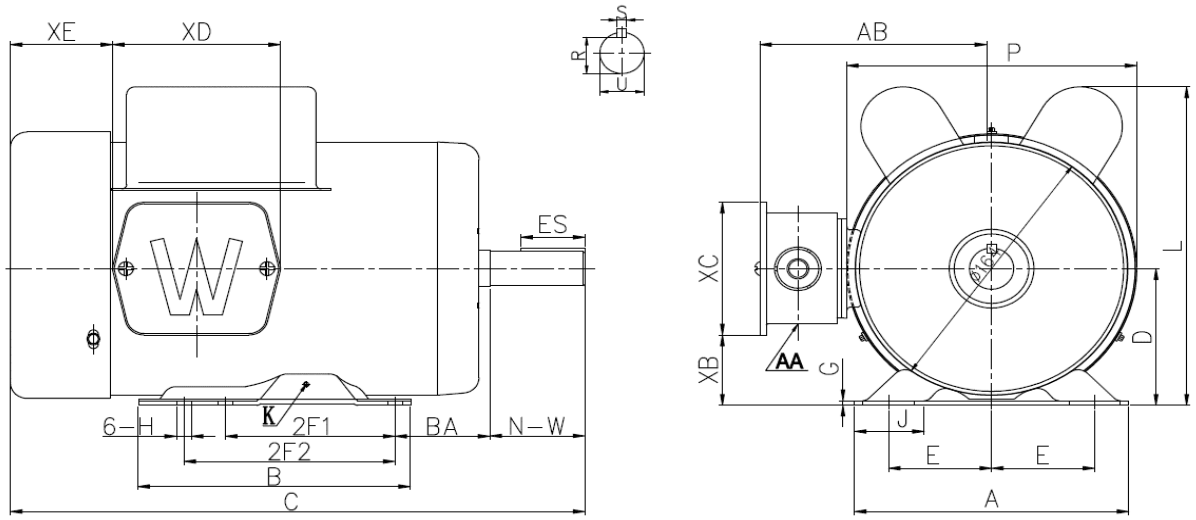

DIMENSION - INCHES

MOUNTING					A	B	C	D	G	L	P	AB
E	2F1	2F2	H	BA								
2.75	4	5	0.34	2.25	6.5	6.5	13.8	3.5	0.12	8.3	6.8	6.2

KETSET	KEY		SHAFT		TERMINAL BOX					K	J
R	ES	S	U	NW	XB	XC	XD	XE	AA		
0.771	1.41	0.188	0.875	2.25	1.56	3.96	4.55	1.66	3-0.88/2-1.109	M5	1.65

This document is the property of WorldWide Electric Corporation and may not be reproduced without express authorization

NAMEPLATE / WIRING

Premium Efficiency Motor: **FD2-18-145T**

WorldWide Electric Corporation
1 (800) 808-2131
Worldwideelectric.net

Document Generated:	21-Feb-2023
Document ID:	

Customer:

SAMPLE NAMEPLATE DATA

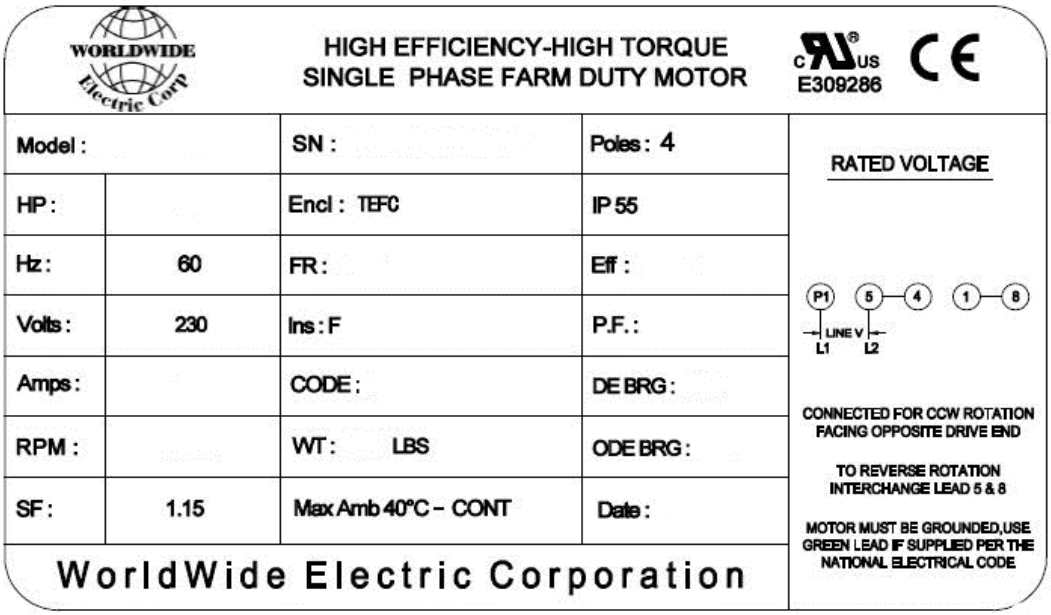

WORLDWIDE Electric Corp

HIGH EFFICIENCY-HIGH TORQUE
SINGLE PHASE FARM DUTY MOTOR

c UL us E309286 CE

Model :		SN :	Poles : 4
HP :		Encl : TEFC	IP 55
Hz :	60	FR :	Eff :
Volts :	230	Ins : F	P.F. :
Amps :		CODE :	DE BRG :
RPM :		WT : LBS	ODE BRG :
SF :	1.15	Max Amb 40°C – CONT	Date :

WorldWide Electric Corporation

RATED VOLTAGE

P1 5 4 1 8
LINE V
L1 L2

CONNECTED FOR CCW ROTATION FACING OPPOSITE DRIVE END

TO REVERSE ROTATION INTERCHANGE LEAD 5 & 8

MOTOR MUST BE GROUNDED,USE GREEN LEAD IF SUPPLIED PER THE NATIONAL ELECTRICAL CODE

Model	FD2-18-145T				
HP	2	**Encl**	TEFC	**IP**	IP55
Hz	60 Hz	**Frame**	145T	**Nom.Eff.**	85.6%
Voltage	230	**Ins Cl**	F	**P.F.**	97.5
Amps	7.82A	**Code**	F	**DE Brng**	6205ZZ C3
RPM	1757.6	**WT:**	48.5 lbs.	**ODE Brng**	6203ZZ C3
S.F.	1.15				

This document is the property of WorldWide Electric Corporation and may not be reproduced without express authorization